Axolight

POSES

POSES: For the modular low voltage lighting system

TECHNICAL DATA : **LED DRIVER NOT INCLUDED**
24Vdc **LED DRIVER NON INCLUSO**

- Use only with Class 2 power unit
- A n'utiliser qu'avec un led driver de classe 2

LOCATION INDOOR LOCATION OUTDOOR

- THIS PRODUCT MUST BE INSTALLED IN ACCORDANCE WITH THE APPLICABLE INSTALLATION CODE (NEC, ARTICLE 411) BY A PERSON FAMILIAR WITH THE CONSTRUCTION AND OPERATION OF THE PRODUCT AND THE HAZARDS INVOLVED
- CE PRODUIT DOIT ÊTRE INSTALLÉ SELON LE CODE D'INSTALLATION PERTINENT (NEC, ARTICLE 411, PAR UNE PERSONNE QUI CONNAÎT BIEN LE PRODUIT ET SON FONCTIONNEMENT AINSI QUE LES RISQUES INHÉRENTS

This luminaire contains a light source with the energy class F.

_ LEGGERE LE ISTRUZIONI GENERICHE PER L'INSTALLAZIONE DI TUTTI GLI APPARECCHI D'ILLUMINAZIONE.

_ READ GENERAL INSTRUCTIONS FOR INSTALLING ALL LIGHTS.

_ BITTE DIE ALLGEMEINE MONTAGEANLEITUNG FÜR ALLE LEUCHTEN LESEN.

_ LIRE LES INSTRUCTIONS GÉNÉRALES POUR L'INSTALLATION DE TOUS LES APPAREILS D'ÉCLAIRAGE.

_ LEER LAS INSTRUCCIONES GENERALES PARA LA INSTALACIÓN DE TODOS LOS APARATOS DE ILUMINACIÓN.

_ ЧИТАЙТЕ ОБЩИЕ ИНСТРУКЦИИ ПО МОНТАЖУ.

PAG. I + II

_ Controllare che la superficie d'installazione e le viti che ad essa vengono fissate siano adeguate all'apparecchio e ne supportino il peso.
_ Ensure the installation surface and the screws that are fastened onto it are suited to the fxture and withstand its weight.
_ Sicherstellen, dass die Installationsoberfäche und die Schrauben, die an ihr befestigt werden, für das Gerät geeignet sind und sein Gewicht aushalten.
_ Contrôler que la surface d'installation et les vis qui lui sont f xées soient appropriées à l'appareil et qu'elles sont en mesure d'en supporter le poids.
_ Controle que la superf cie de instalación y los tornillos f jados a ella sean adecuados para el aparato y soporten el peso.
_ Проверить, что поверхность установки и крепёжные болты соответствуют прибору и имеют подходящую грузоподъёмность

ACPOSES0451ON**XX**

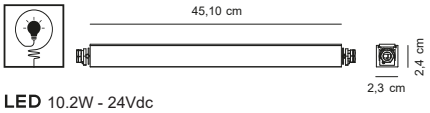

LED 10.2W - 24Vdc
840lm* source

ACPOSES0821ON**XX**

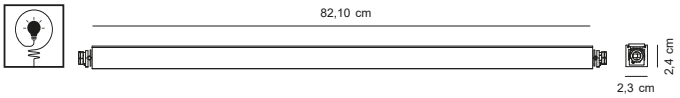

LED 19.4W - 24Vdc
1640lm* source

ACPOSES1421ON**XX**

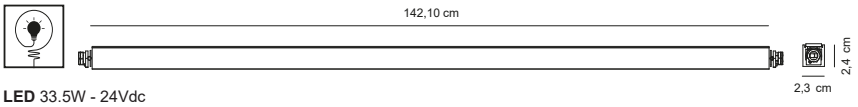

LED 33.5W - 24Vdc
2867lm* source

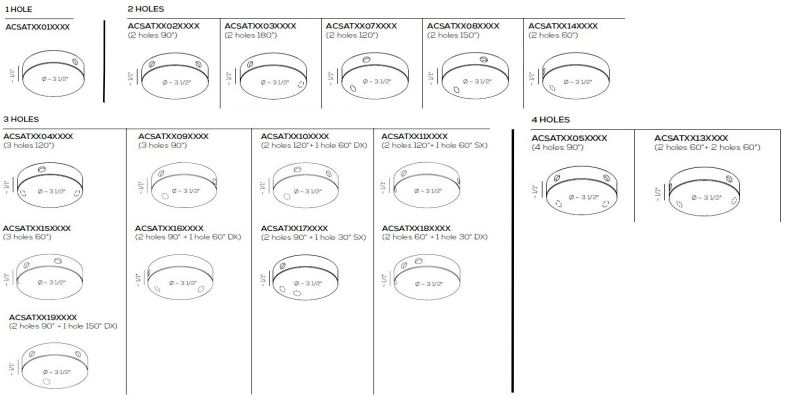

ACCAVINOX0300**CR**

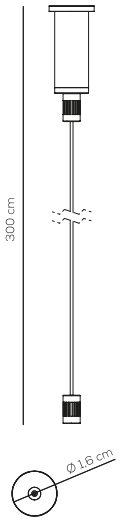

ACPIEDINO07XX**XX**

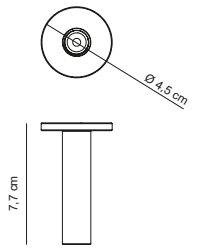

ACPIEDINO22XX**XX**

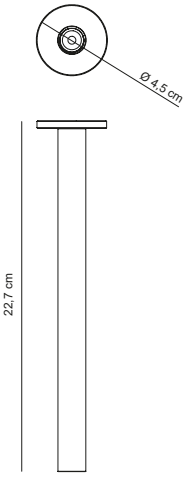

ACCANOPYRE001

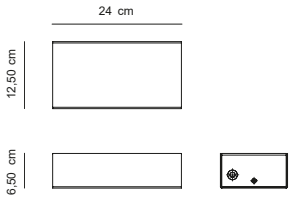

ACCANOPYTO001

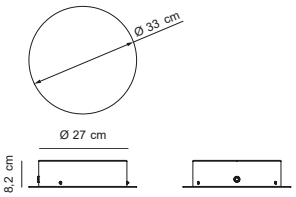

ACCANOPYIN001**BC** (for recessed system)

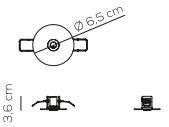

ACBLOCCACAV01**XX**

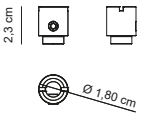

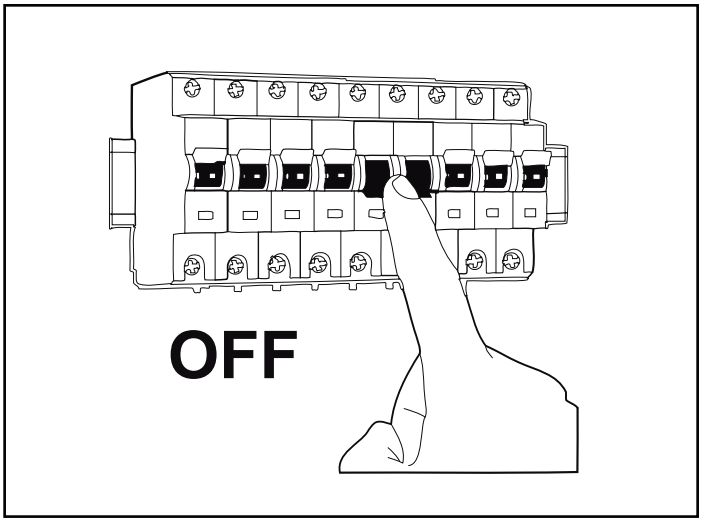

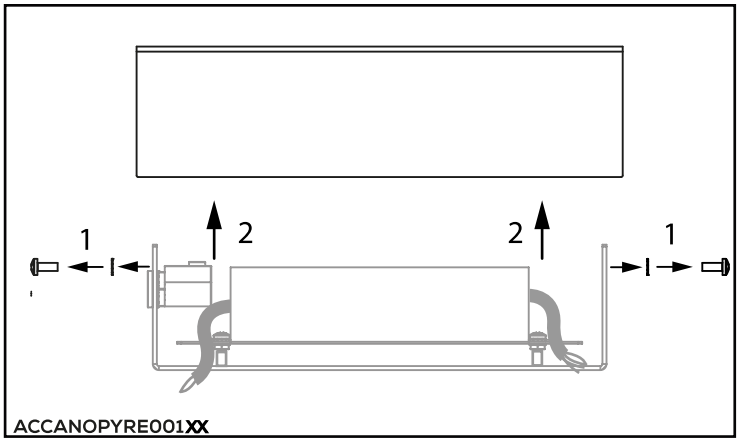

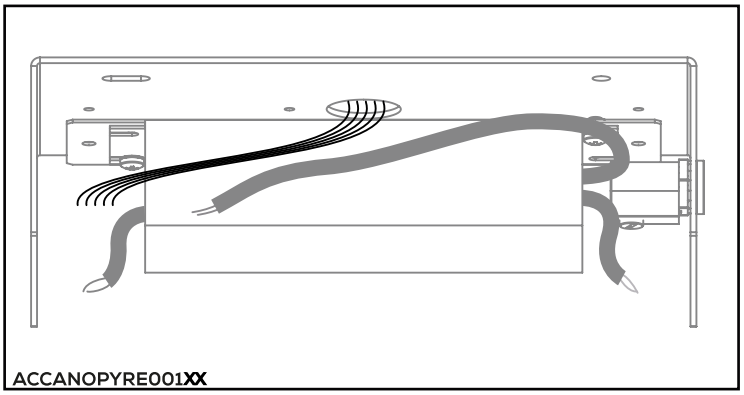

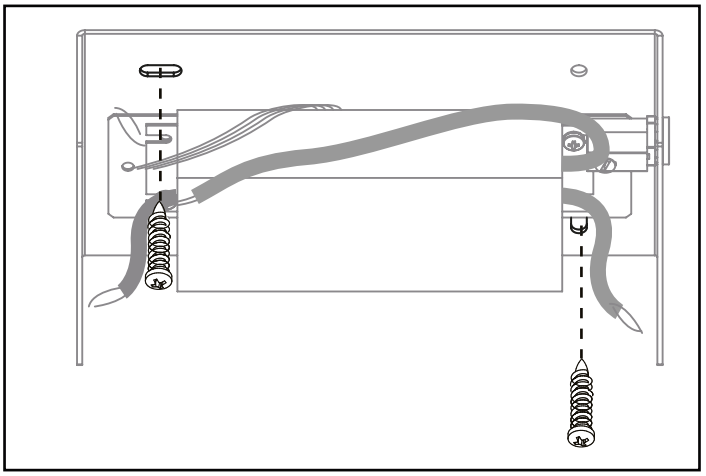

COLLEGAMENTO ELETTRICO / ELECTRICAL CONNECTION

This section is valid for EU only -
This section is not valid for US-CAN certification

(L) Brown / Marrone / Marron / Marrón / Braun / коричневый
(N) Blue / Blu / Blru / Azul / Blau / синий
(+0/1) Red, Rosso, Rojo, Rouge, Rot, красный
(-10) White / Bianco / Blanc / Blanco / Weiß / белый

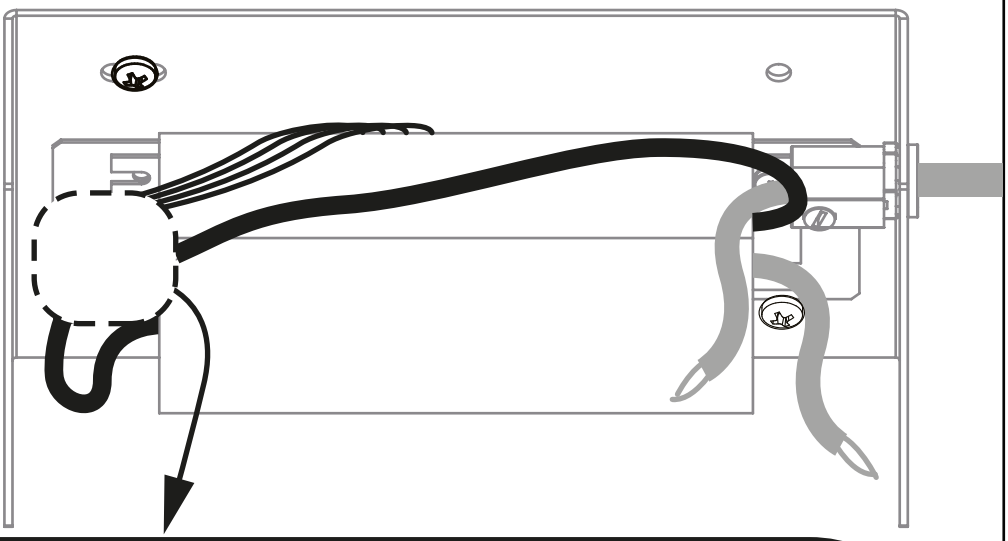

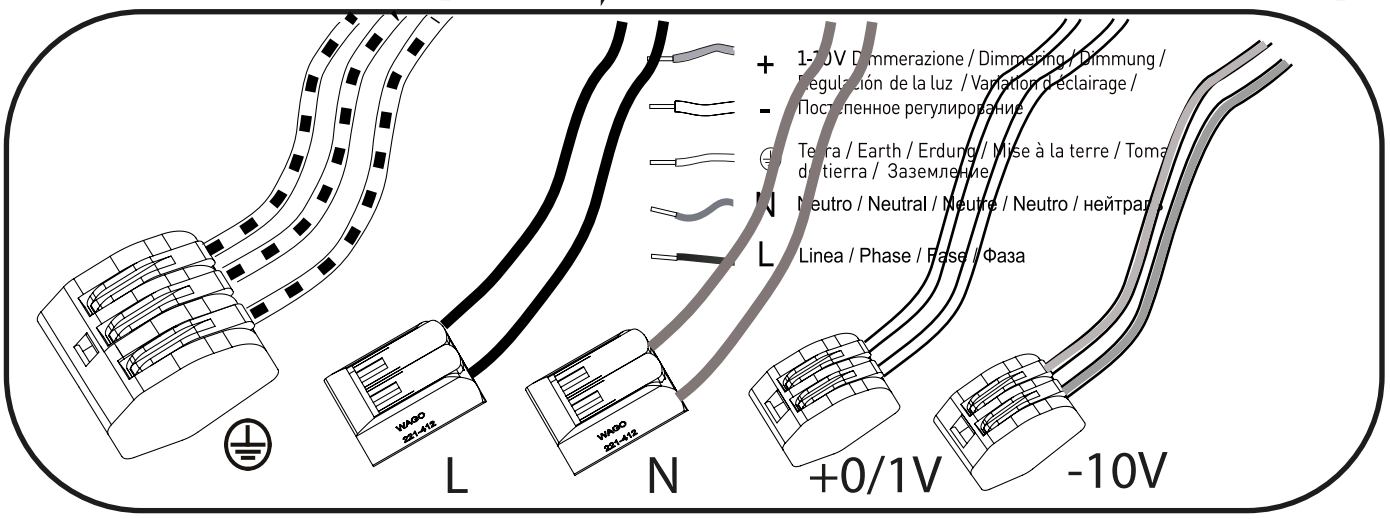

CABLAGGIO AL SECONDARIO / SECONDARY SIDE CONNECTION

(Nel caso di accorciamento del cavo vedi / If the cable is shortened see / Falls das Kabel verkürzt werden soll siehe / En cas de raccourcissement du composant câble voir/ En el caso de acortamiento del cable vea/ Если кабель укорочен, см. инструкции по подключению: WARNING!)
rispettare la polarità / respect the polarity / die richtige Polarität beachten / respecter la polarité / respetar la polaridad / соблюдать полярность

Collegare ad una adeguata alimentazione 24VDC / Connect to a suitable 24VDC supply

OPTIONAL LED DRIVER NOT INCLUDED

"Use only with Class 2 power unit." - "Utilisez uniquement avec l'unité d'alimentation de classe 2"

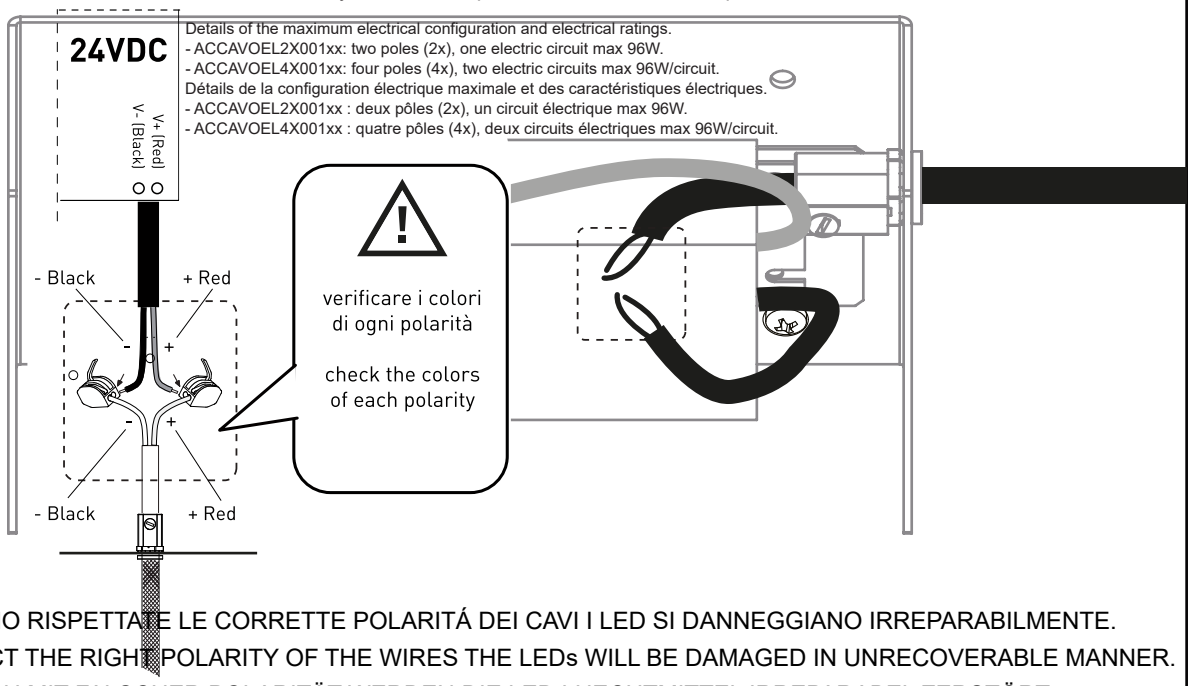

SE NON VENGONO RISPETTATE LE CORRETTE POLARITÁ DEI CAVI I LED SI DANNEGGIANO IRREPARABILMENTE.
IF YOU DON'T RESPECT THE RIGHT POLARITY OF THE WIRES THE LEDs WILL BE DAMAGED IN UNRECOVERABLE MANNER.
BEI ANSCHLU MIT FALSCHER POLARITÄT WERDEN DIE LED LUECHTMITTEL IRREPARABEL ZERSTÖRT.
SI LE POLARITÉ SERONT PAS RESPECTÉ LE LED SERONT ENDOMMAGÉ DE MANIER PERMANENT.
SI LAS POLARIDADES DE LOS CABLES NO SERAN RESPETADAS LOS LED SERÁN DAÑADOS PERMANENTEMENTE.
СВЕТОДИОДЫ ЧУВСТВИТЕЛЬНЫ К ПОЛЯРНОСТИ ЭЛЕКТРИЧЕСКОГО ТОКА, В СЛУЧАЕ НЕСОБЛЮДЕНИЯ ПОЛЯРНОСТИ СВЕТОДИОДЫ БУДУТ ПОВРЕЖДЕНЫ БЕЗВОЗВРАТНО

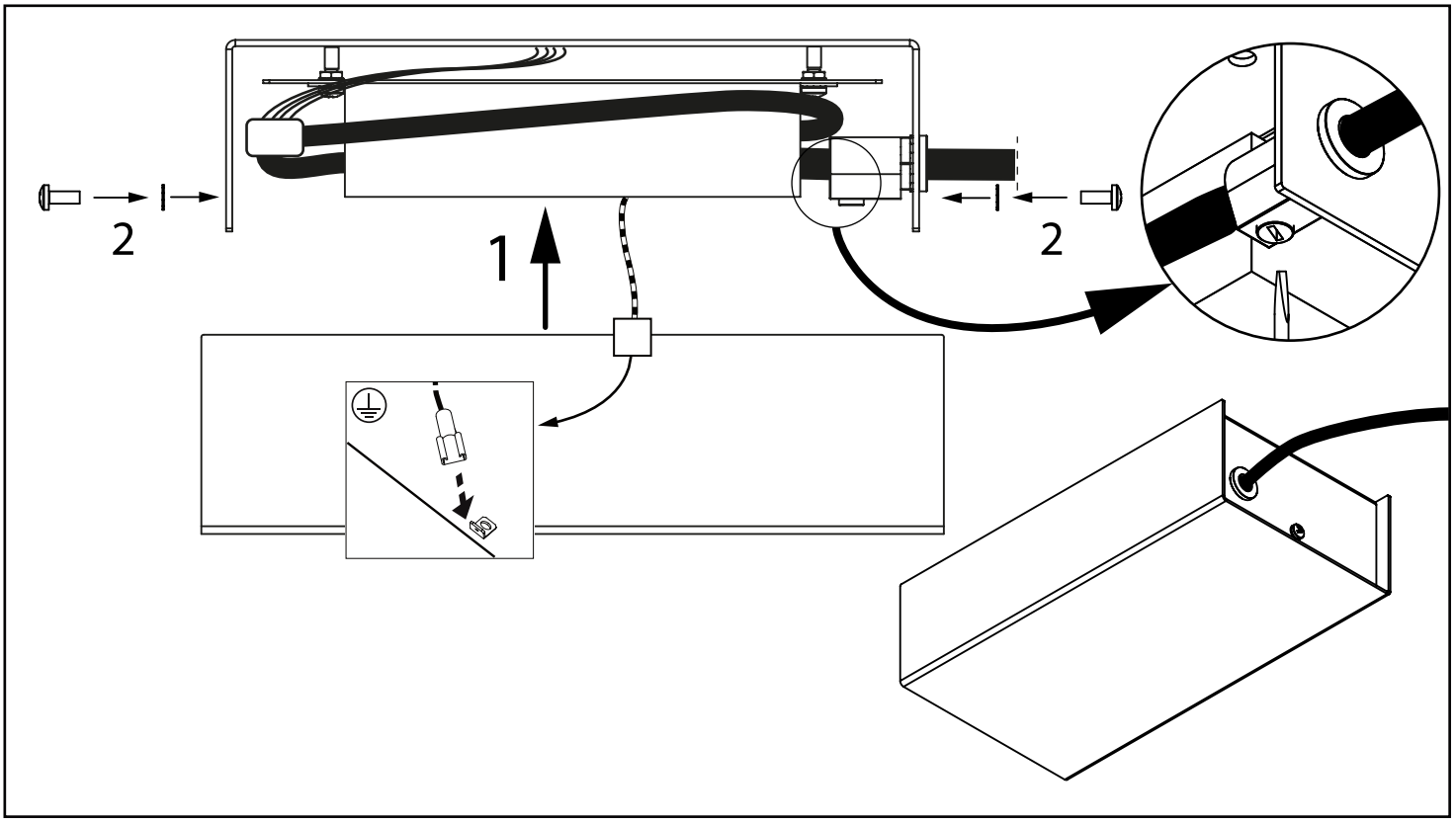

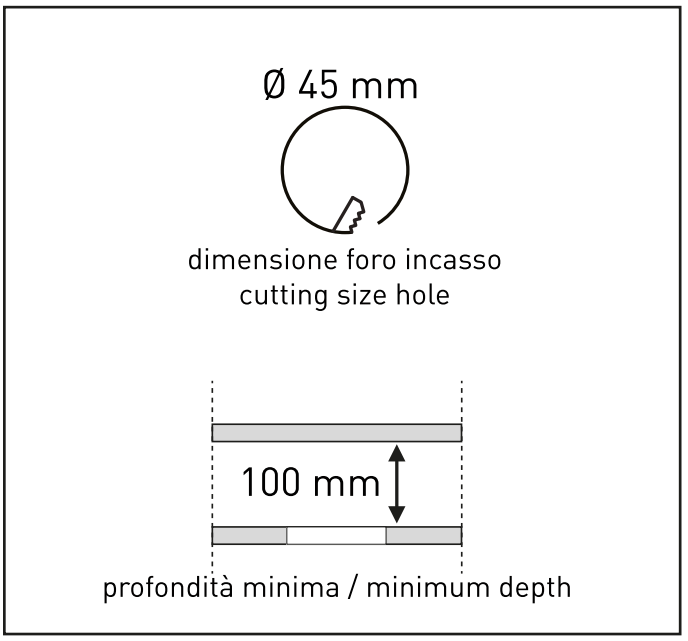
Ø 45 mm
dimensione foro incasso
cutting size hole
100 mm
profondità minima / minimum depth

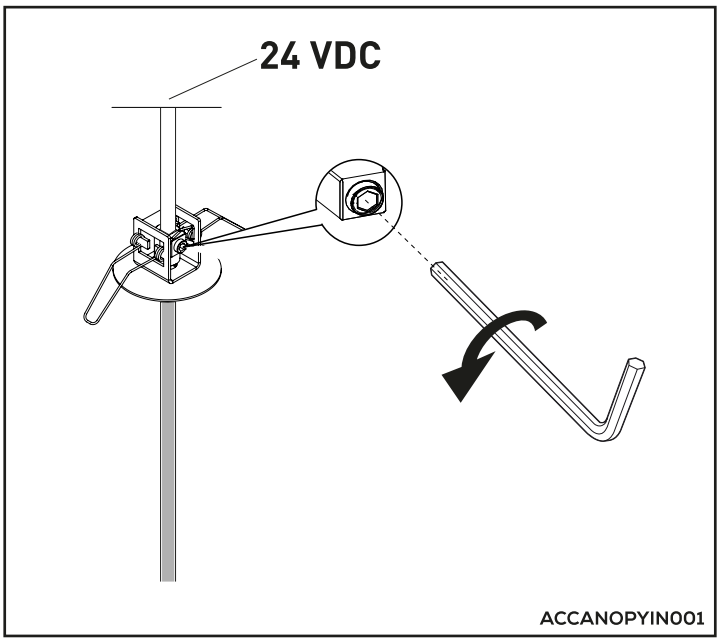
24 VDC
ACCANOPYIN001

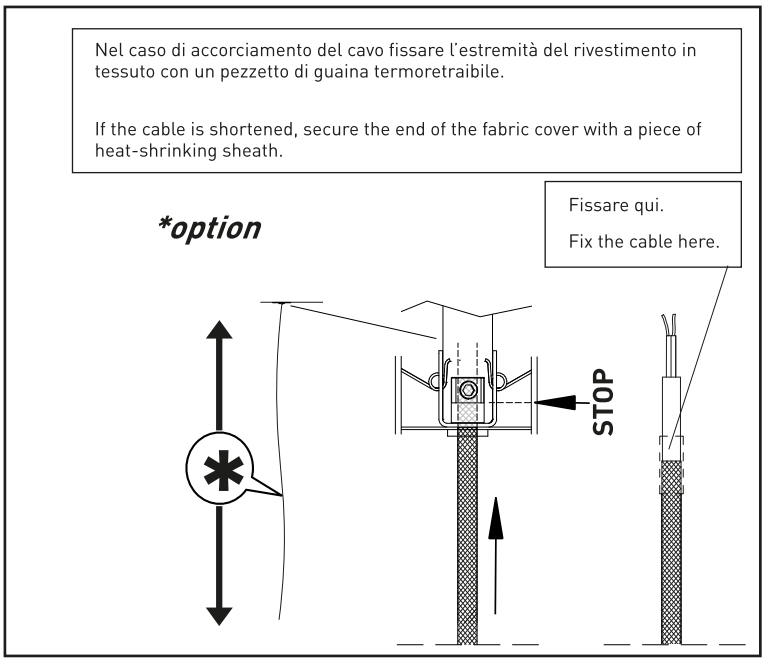
Nel caso di accorciamento del cavo fissare l'estremità del rivestimento in tessuto con un pezzetto di guaina termoretraibile.
If the cable is shortened, secure the end of the fabric cover with a piece of heat-shrinking sheath.
*option
Fissare qui.
Fix the cable here.
STOP

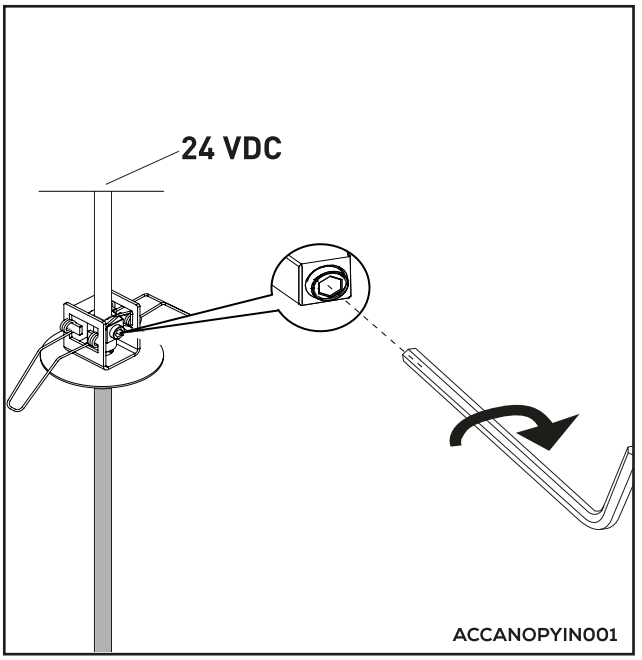
24 VDC
ACCANOPYIN001

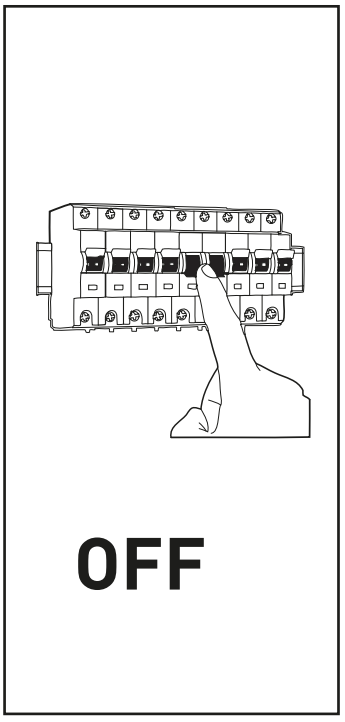
OFF

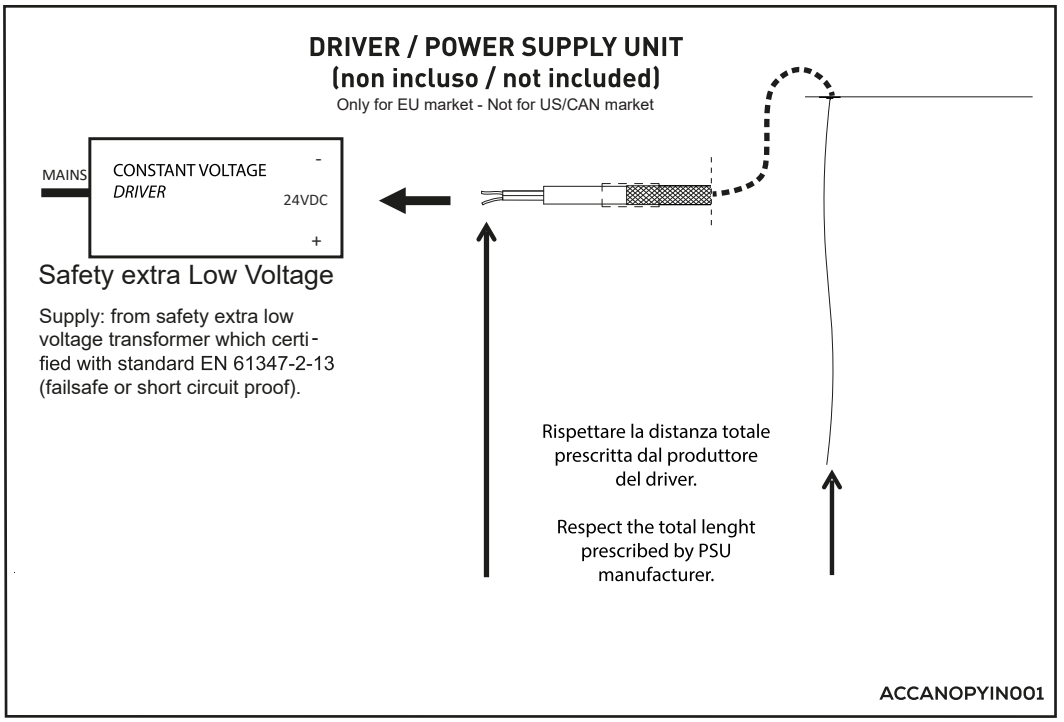
DRIVER / POWER SUPPLY UNIT
(non incluso / not included)
Only for EU market - Not for US/CAN market
MAINS
CONSTANT VOLTAGE
DRIVER
-
24VDC
+
Safety extra Low Voltage
Supply: from safety extra low voltage transformer which certi-fied with standard EN 61347-2-13 (failsafe or short circuit proof).
Rispettare la distanza totale prescritta dal produttore del driver.
Respect the total lenght prescribed by PSU manufacturer.
ACCANOPYIN001

CABLAGGIO SECONDARIO / SECONDARY SIDE CONNECTION

(Nel caso di accorciamento del cavo vedi/If the cable is shortened see/Falls das Kabel verkürzt werden soll siehe/En cas de raccourcissement du composant câble voir/En el caso de acortamiento del cable vea/
Если кабель укорочен, см. инструкции по подключению: WARNING!)

rispettare la polarità / respect the polarity / die richtige Polarität beachten / respecter la polarité / respetar la polaridad / соблюдать полярность

collegare ad una adeguata alimentazione 24VDC / connect to a suitable 24VDC supply

- For the modular low voltage lighting system
- Pour le système modulaire d'éclairage basse tension
- OPTIONAL LED DRIVER NOT INCLUDED
- "Use only with Class 2 power unit"
- "Utilisez uniquement avec l'unité d'alimentation de classe 2"

Details of the maximum electrical configuration and electrical ratings.
- ACCAVOEL2X001xx: two poles (2x), one electric circuit max 96W.
- ACCAVOEL4X001xx: four poles (4x), two electric circuits max 96W/circuit.

Détails de la configuration électrique maximale et des caractéristiques électriques.
- ACCAVOEL2X001xx : deux pôles (2x), un circuit électrique max 96W.
- ACCAVOEL4X001xx : quatre pôles (4x), deux circuits électriques max 96W/circuit.

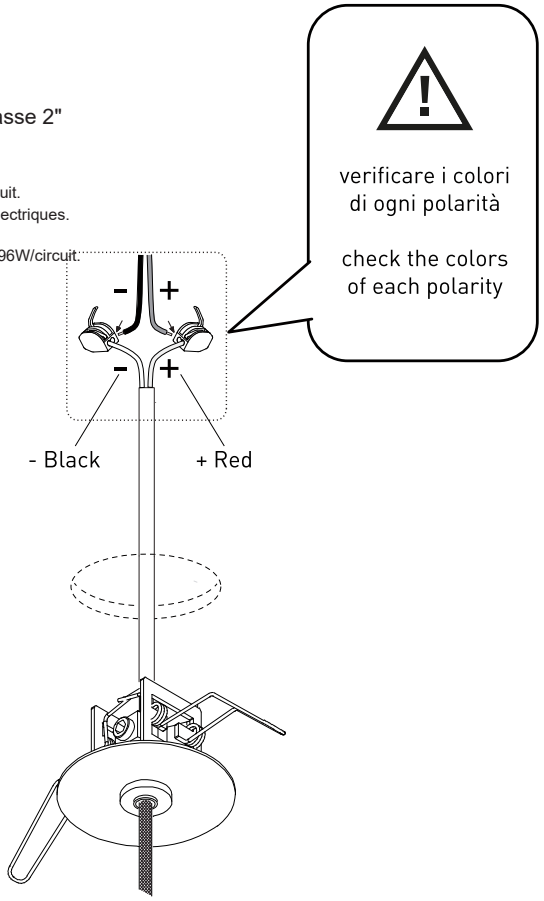

ACCANOPYIN001

SE NON VENGONO RISPETTATE LE CORRETTE POLARITÁ DEI CAVI I LED SI DANNEGGIANO IRREPARABILMENTE.

IF YOU DON'T RESPECT THE RIGHT POLARITY OF THE WIRES THE LEDs WILL BE DAMAGED IN UNRECOVERABLE MANNER.

BEI ANSCHLU MIT FALSCHER POLARITÄT WERDEN DIE LED LUECHTMITTEL IRREPARABEL ZERSTÖRT.

SI LE POLARITÉ SERONT PAS RESPECTÉ LE LED SERONT ENDOMMAGÉ DE MANIER PERMANENT.

SI LAS POLARIDADES DE LOS CABLES NO SERAN RESPETADAS LOS LED SERÁN DAÑADOS PERMANENTEMENTE.

СВЕТОДИОДЫ ЧУВСТВИТЕЛЬНЫ К ПОЛЯРНОСТИ ЭЛЕКТРИЧЕСКОГО ТОКА, В СЛУЧАЕ НЕСОБЛЮДЕНИЯ ПОЛЯРНОСТИ СВЕТОДИОДЫ БУДУТ ПОВРЕЖДЕНЫ БЕЗВОЗВРАТНО.

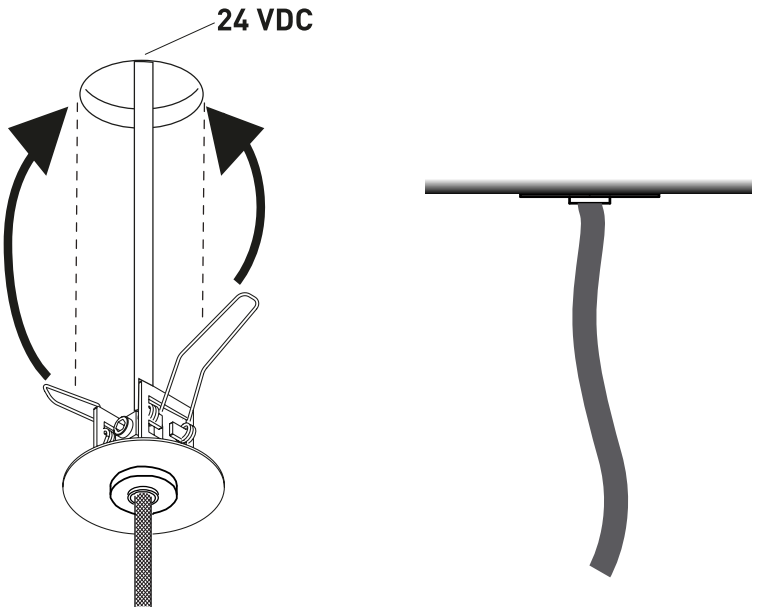

ACCANOPYIN001

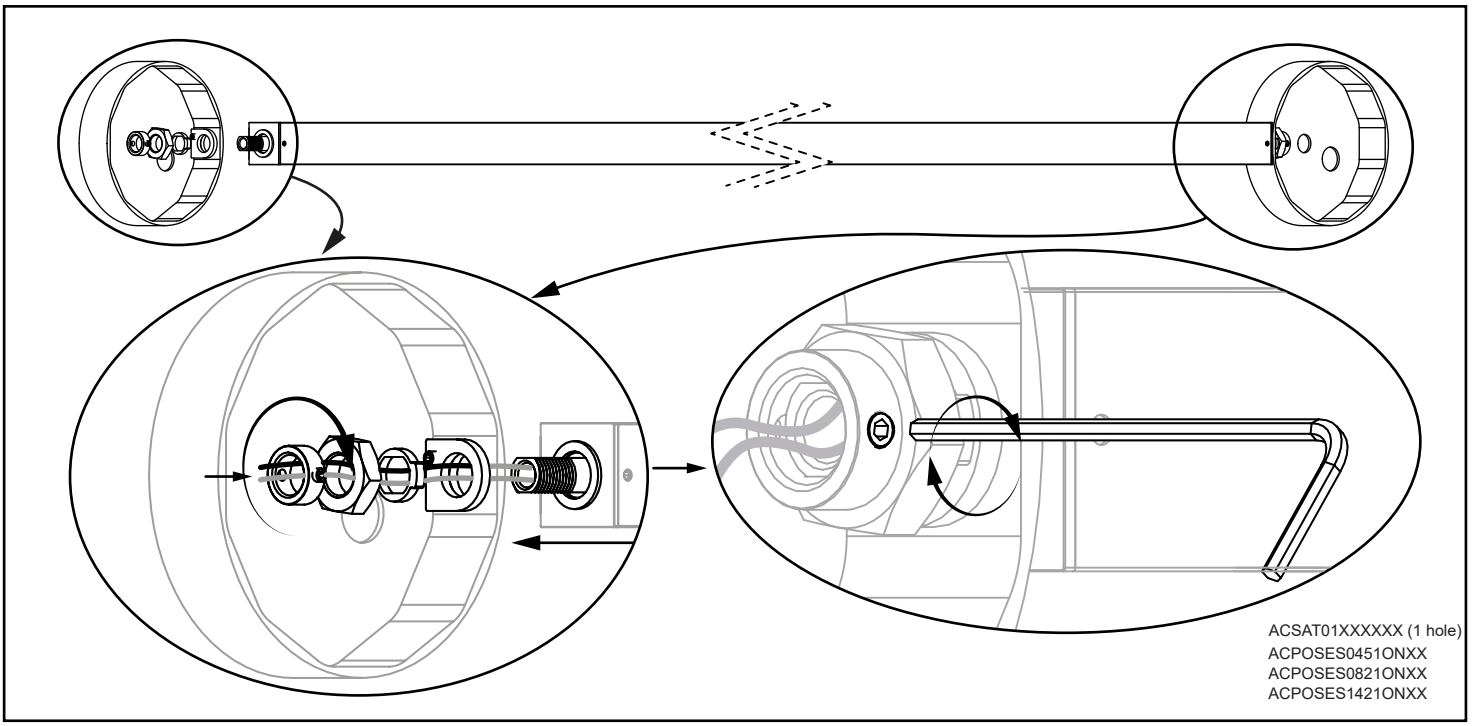
ACSAT01XXXXXX (1 hole)
ACPOSES0451ONXX
ACPOSES0821ONXX
ACPOSES1421ONXX

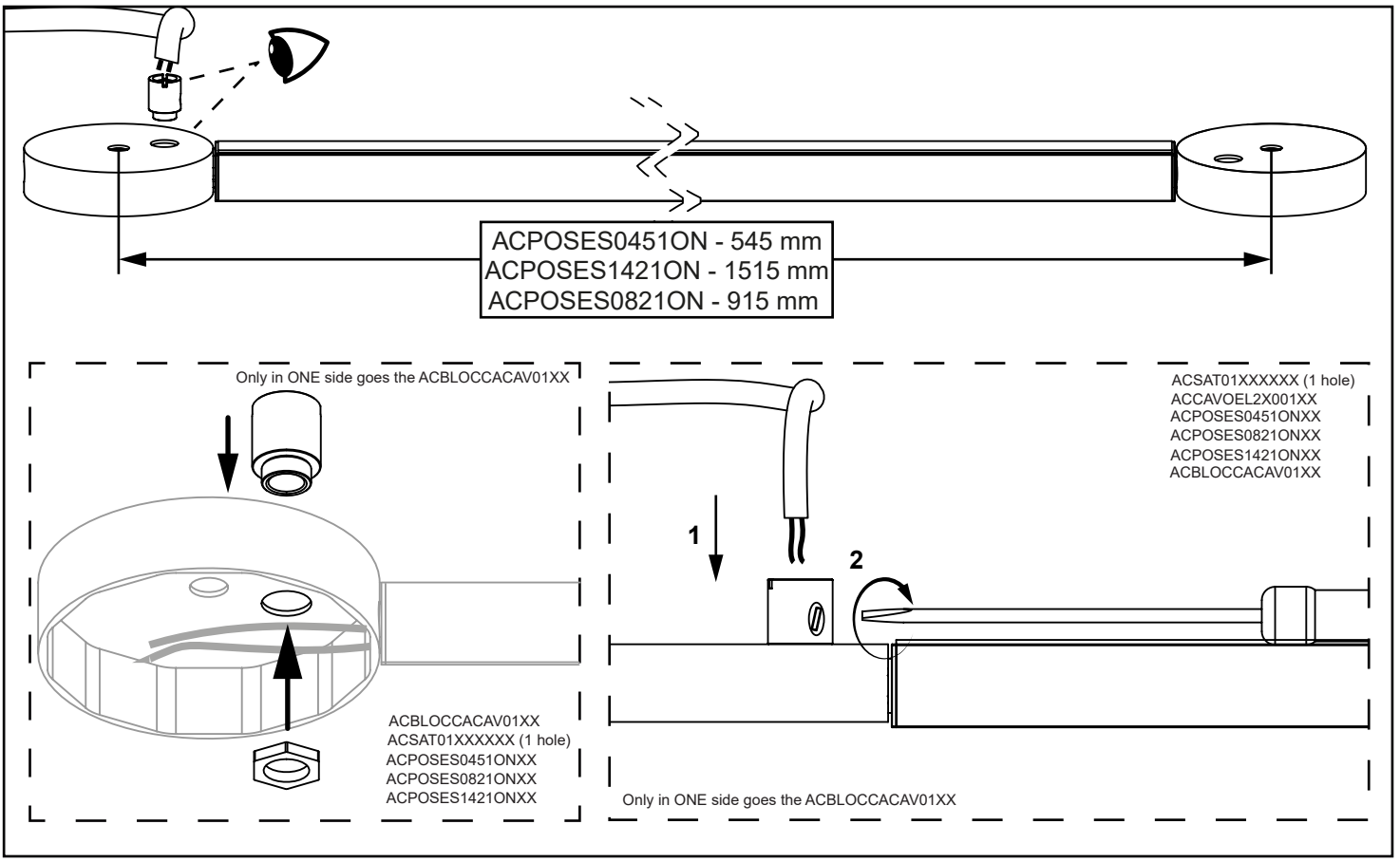
ACPOSES0451ON - 545 mm
ACPOSES1421ON - 1515 mm
ACPOSES0821ON - 915 mm
Only in ONE side goes the ACBLOCCACAV01XX
ACBLOCCACAV01XX
ACSAT01XXXXXX (1 hole)
ACPOSES0451ONXX
ACPOSES0821ONXX
ACPOSES1421ONXX
ACSAT01XXXXXX (1 hole)
ACCAVOEL2X001XX
ACPOSES0451ONXX
ACPOSES0821ONXX
ACPOSES1421ONXX
ACBLOCCACAV01XX
1
2
Only in ONE side goes the ACBLOCCACAV01XX

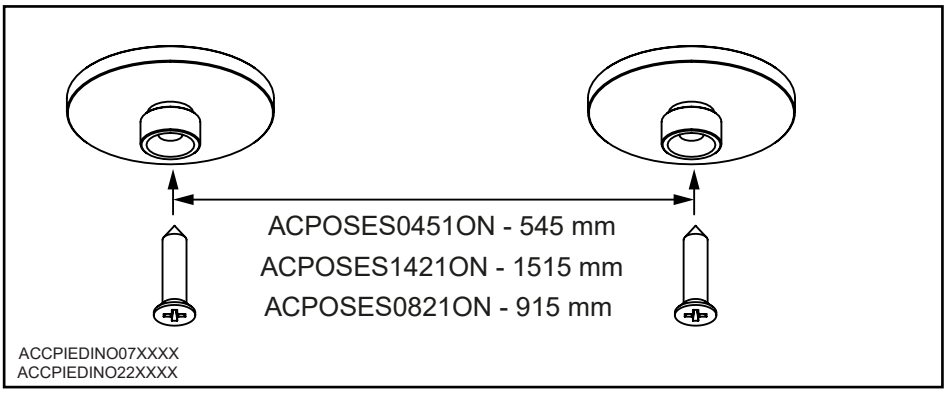
ACPOSES0451ON - 545 mm
ACPOSES1421ON - 1515 mm
ACPOSES0821ON - 915 mm
ACCPIEDINO07XXXX
ACCPIEDINO22XXXX

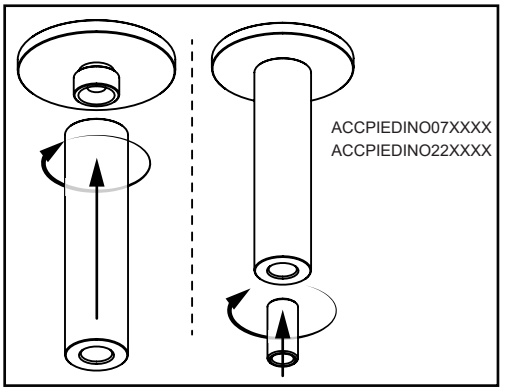
ACCPIEDINO07XXXX
ACCPIEDINO22XXXX

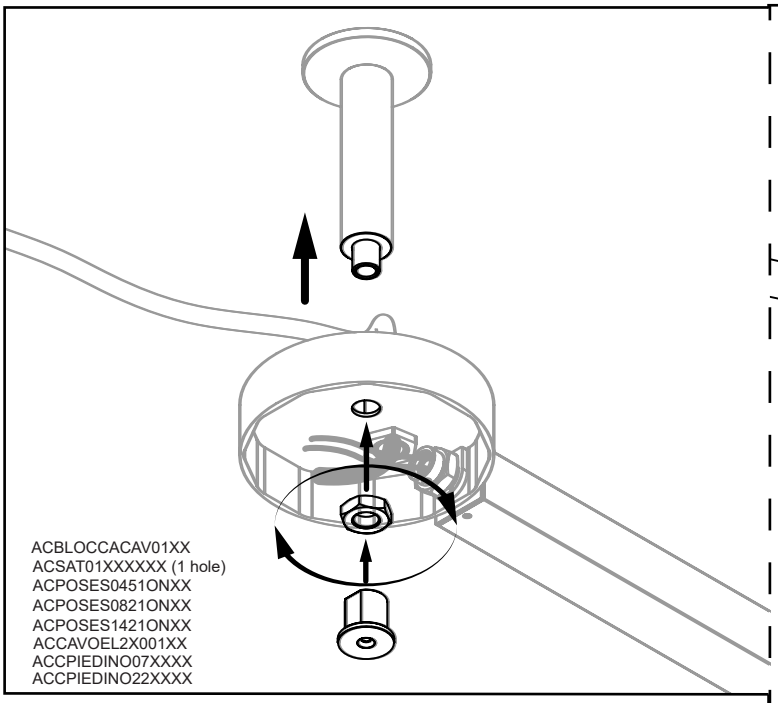

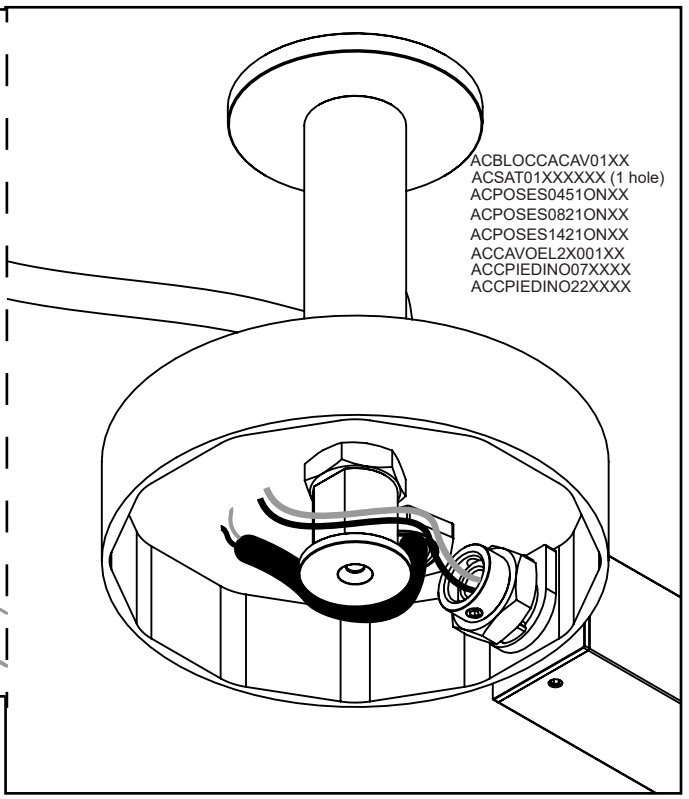

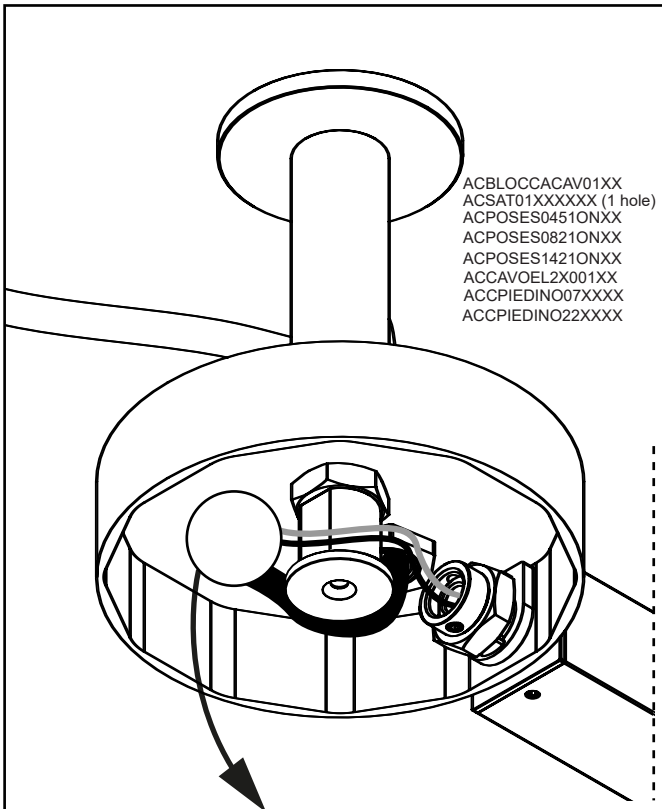

CABLAGGIO SECONDARIO / SECONDARY SIDE CONNECTION

SE NON VENGONO RISPETTATE LE CORRETTE POLARITÁ DEI CAVI I LED SI DANNEGGIANO IRREPARABILMENTE.

IF YOU DON'T RESPECT THE RIGHT POLARITY OF THE WIRES THE LEDs WILL BE DAMAGED IN UNRECOVERABLE MANNER.

BEI ANSCHLU MIT FALSCHER POLARITÄT WERDEN DIE LED LUECHTMITTEL IRREPARABEL ZERSTÖRT.

SI LE POLARITÉ SERONT PAS RESPECTÉ LE LED SERONT ENDOMMAGÉ DE MANIER PERMANENT.

SI LAS POLARIDADES DE LOS CABLES NO SERAN RESPETADAS LOS LED SERÁN DAÑADOS PERMANENTEMENTE.

СВЕТОДИОДЫ ЧУВСТВИТЕЛЬНЫ К ПОЛЯРНОСТИ ЭЛЕКТРИЧЕСКОГО ТОКА, В СЛУЧАЕ НЕСОБЛЮДЕНИЯ ПОЛЯРНОСТИ СВЕТОДИОДЫ БУДУТ ПОВРЕЖДЕНЫ БЕЗВОЗВРАТНО.

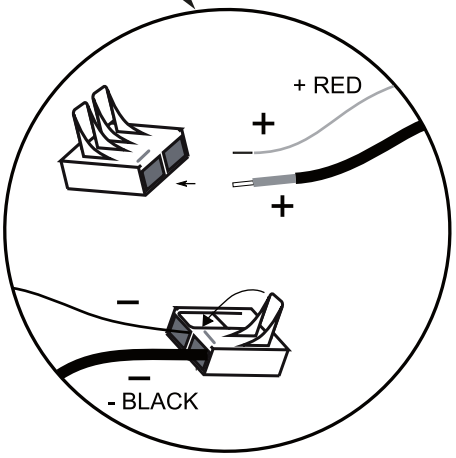

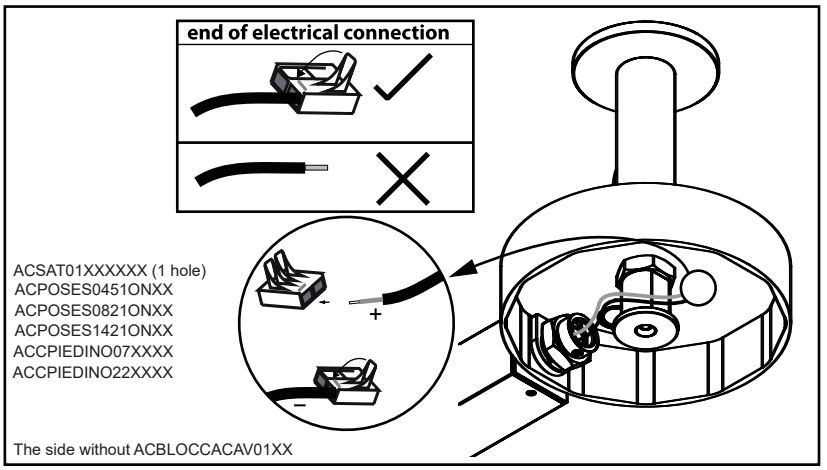

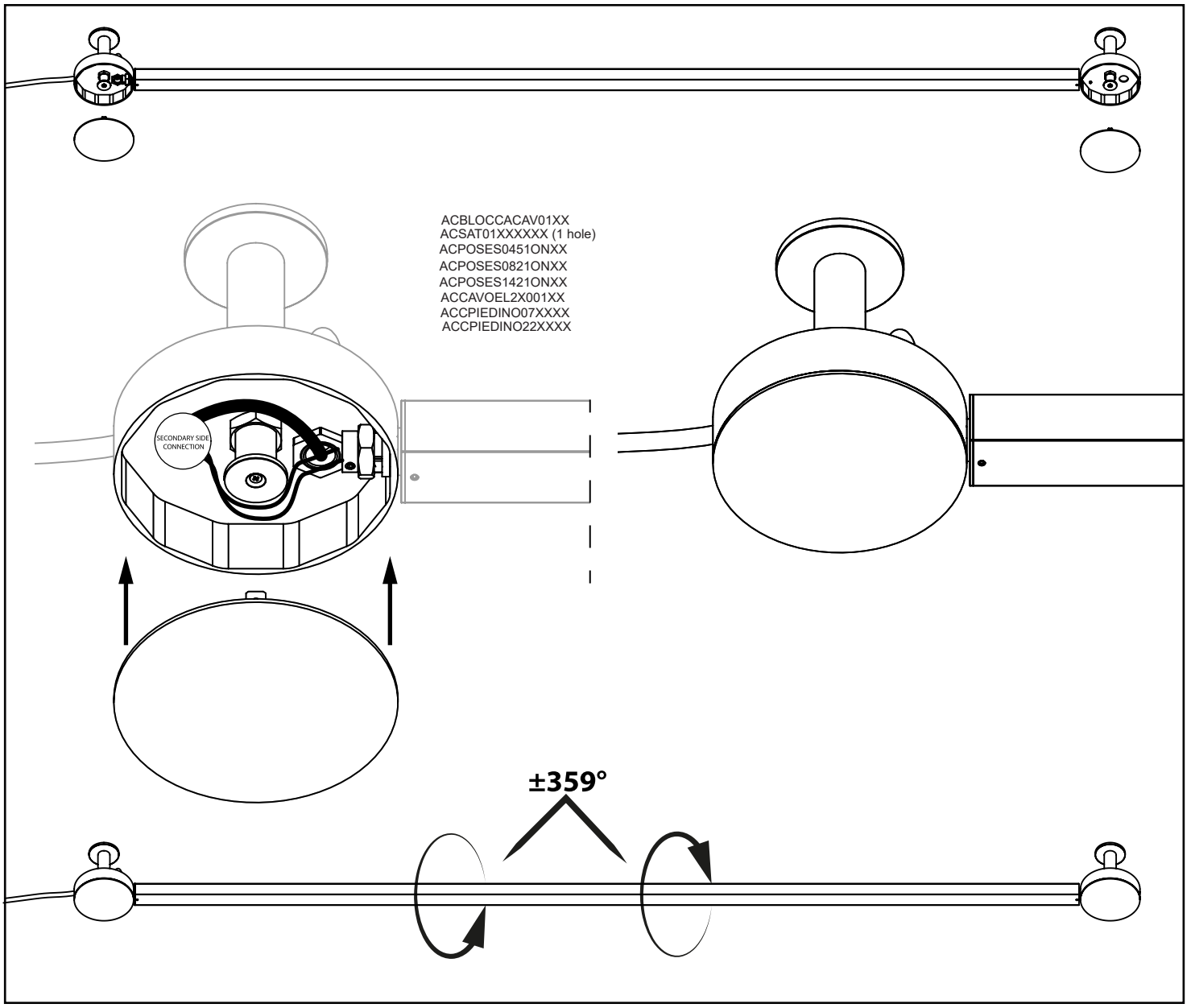
ACBLOCCACAV01XX
ACSAT01XXXXXX (1 hole)
ACPOSES0451ONXX
ACPOSES0821ONXX
ACPOSES1421ONXX
ACCAVOEL2X001XX
ACCPIEDINO07XXXX
ACCPIEDINO22XXXX
SECONDARY SIDE CONNECTION
±359°

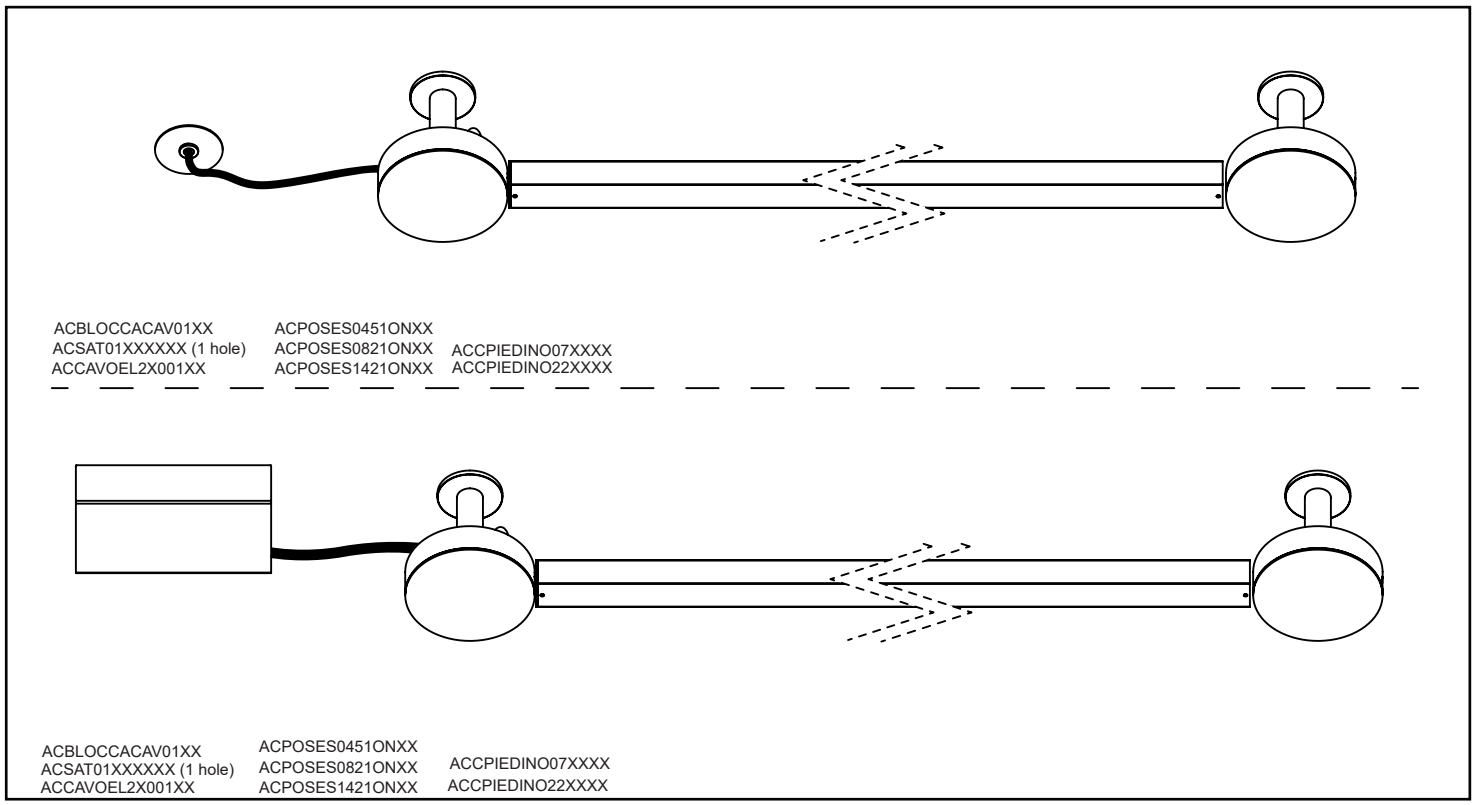
ACBLOCCACAV01XX
ACSAT01XXXXXX (1 hole)
ACCAVOEL2X001XX
ACPOSES0451ONXX
ACPOSES0821ONXX
ACPOSES1421ONXX
ACCPIEDINO07XXXX
ACCPIEDINO22XXXX
ACBLOCCACAV01XX
ACSAT01XXXXXX (1 hole)
ACCAVOEL2X001XX
ACPOSES0451ONXX
ACPOSES0821ONXX
ACPOSES1421ONXX
ACCPIEDINO07XXXX
ACCPIEDINO22XXXX

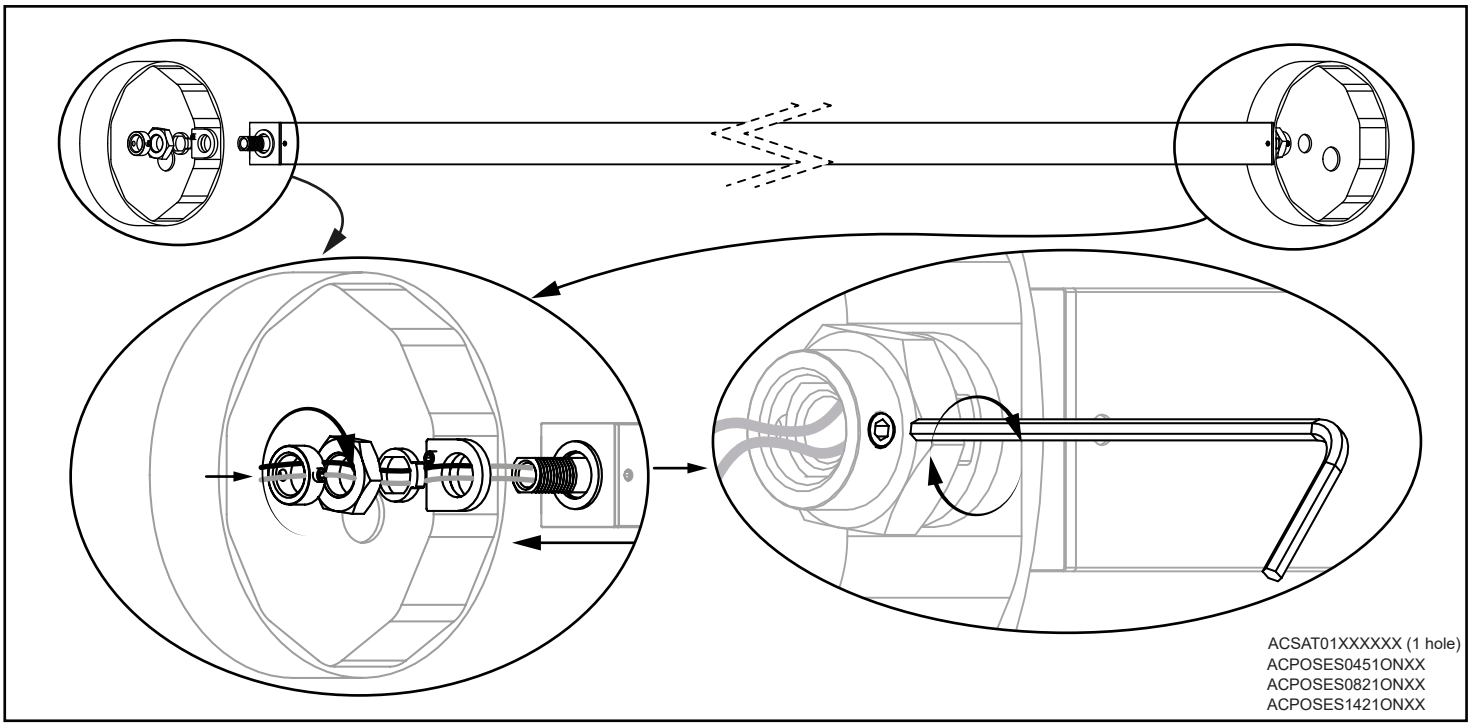
ACSAT01XXXXXX (1 hole)
ACPOSES0451ONXX
ACPOSES0821ONXX
ACPOSES1421ONXX

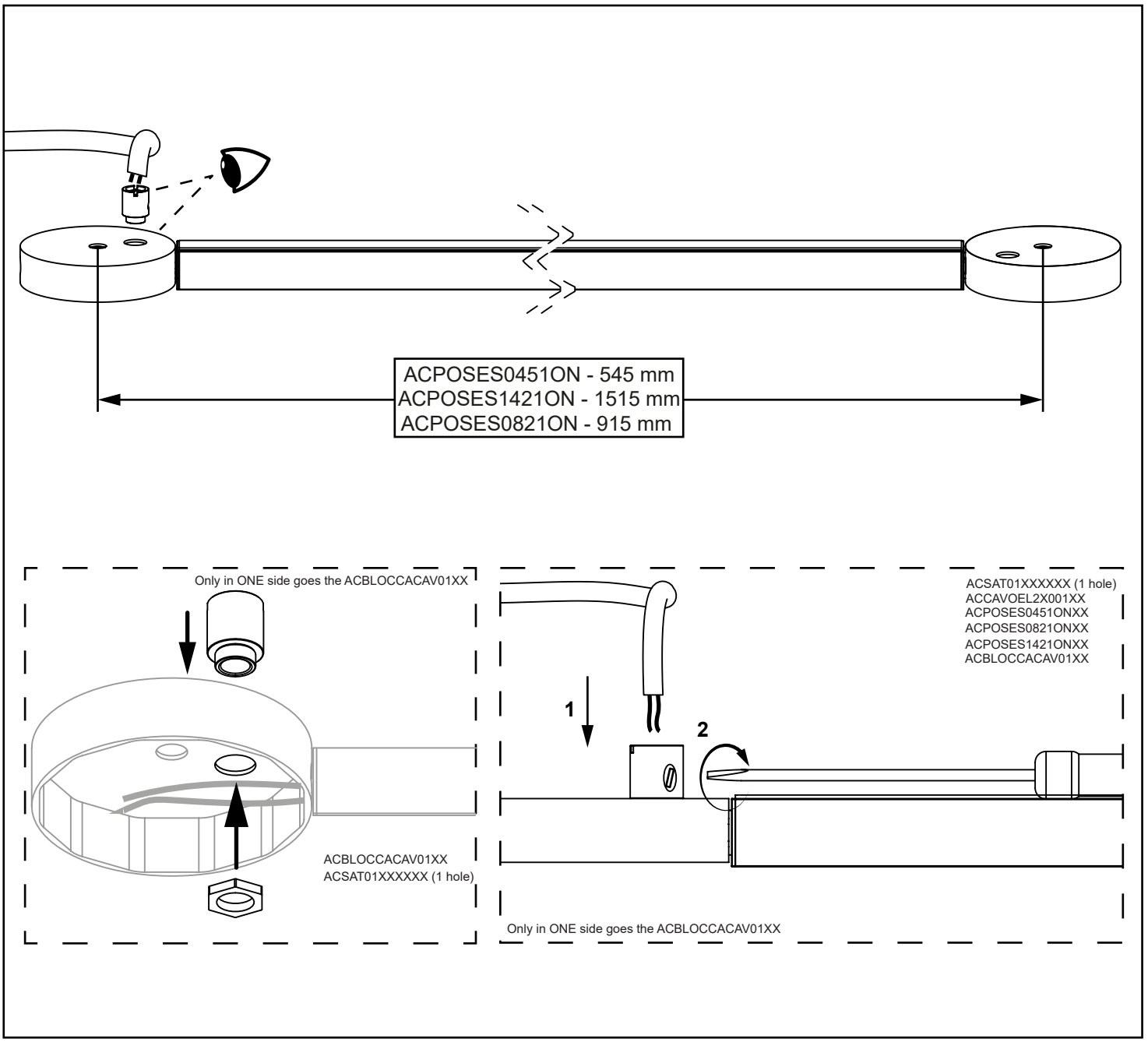
ACPOSES0451ON - 545 mm
ACPOSES1421ON - 1515 mm
ACPOSES0821ON - 915 mm
Only in ONE side goes the ACBLOCCACAV01XX
ACBLOCCACAV01XX
ACSAT01XXXXXX (1 hole)
ACSAT01XXXXXX (1 hole)
ACCAVOEL2X001XX
ACPOSES0451ONXX
ACPOSES0821ONXX
ACPOSES1421ONXX
ACBLOCCACAV01XX
1
2
Only in ONE side goes the ACBLOCCACAV01XX

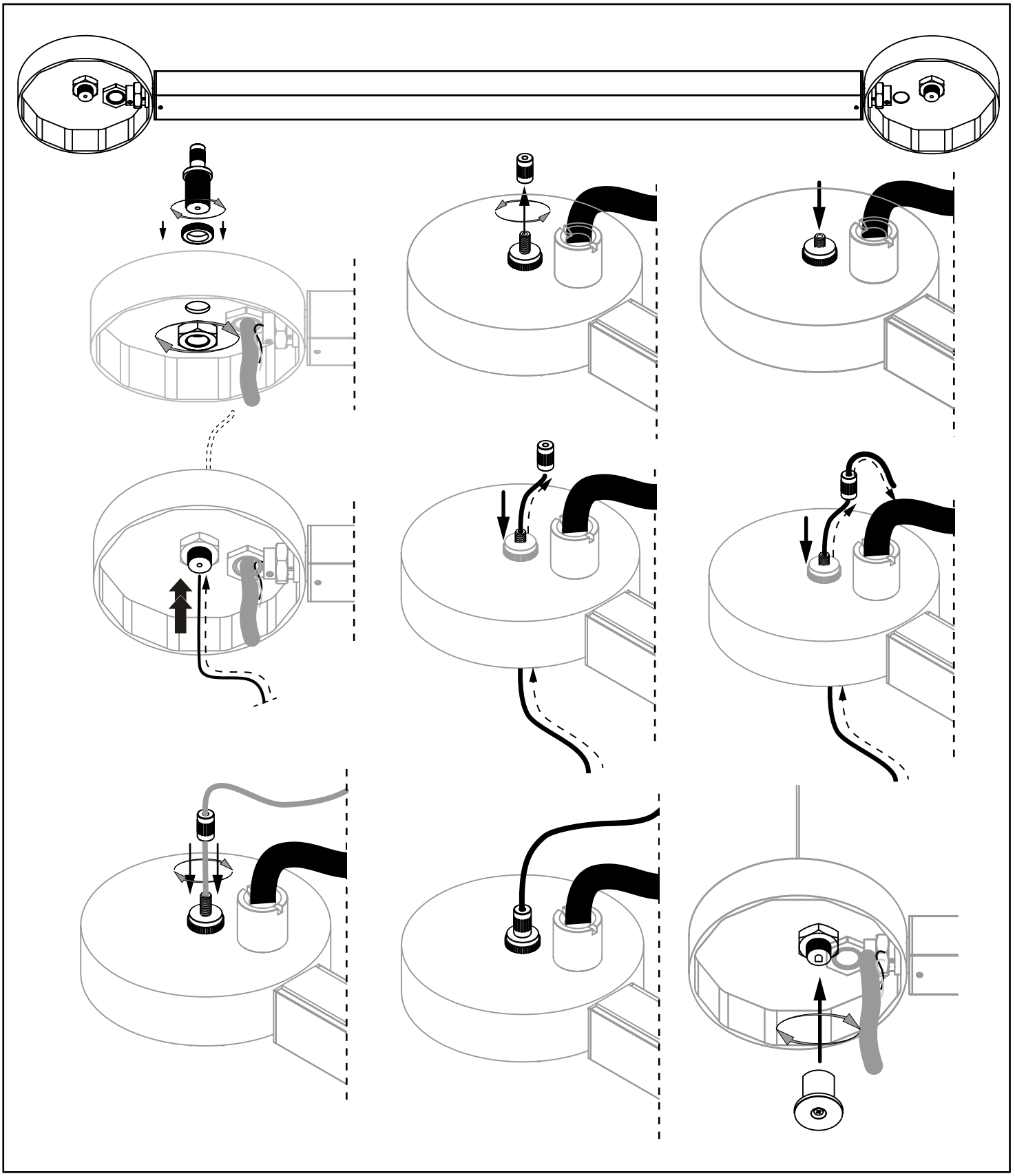

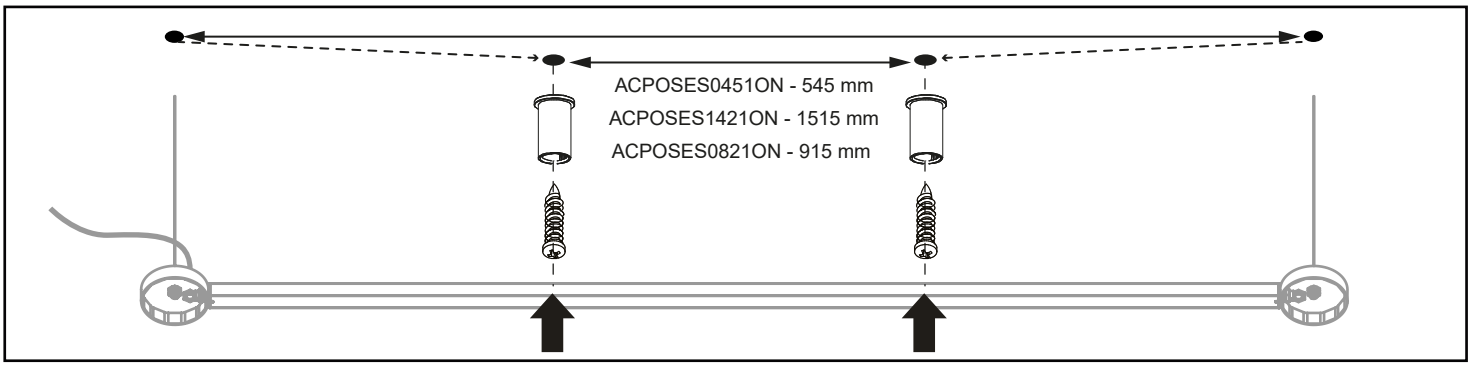
ACPOSES0451ON - 545 mm
ACPOSES1421ON - 1515 mm
ACPOSES0821ON - 915 mm

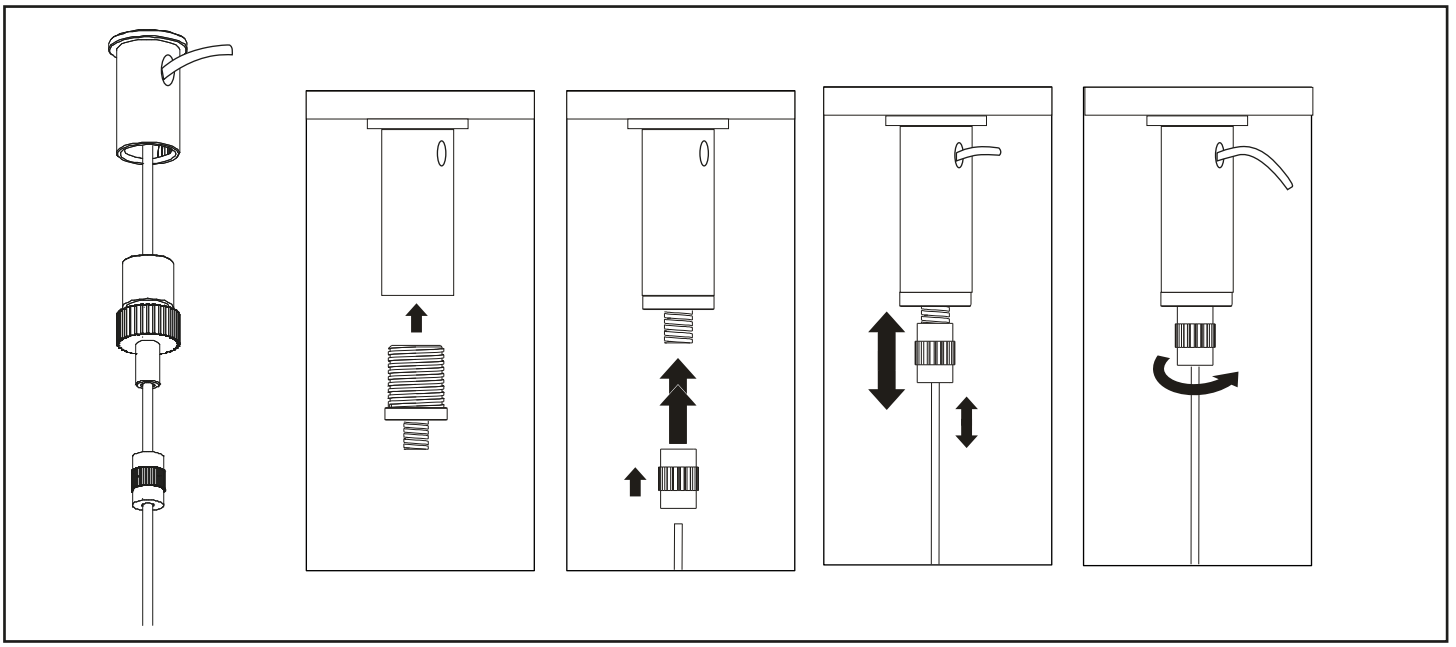

CABLAGGIO SECONDARIO / SECONDARY SIDE CONNECTION

SE NON VENGONO RISPETTATE LE CORRETTE POLARITÁ DEI CAVI I LED SI DANNEGGIANO IRREPARABILMENTE.

ACBLOCCACAV01XX
ACSAT01XXXXXX (1 hole)
ACCAVOEL2X001XX
ACPOSES0451ONXX
ACPOSES0821ONXX
ACPOSES1421ONXX

IF YOU DON'T RESPECT THE RIGHT POLARITY OF THE WIRES THE LEDs WILL BE DAMAGED IN UNRECOVERABLE MANNER.

BEI ANSCHLU MIT FALSCHER POLARITÄT WERDEN DIE LED LUECHTMITTEL IRREPARABEL ZERSTÖRT.

SI LE POLARITÉ SERONT PAS RESPECTÉ LE LED SERONT ENDOMMAGÉ DE MANIER PERMANENT.

SI LAS POLARIDADES DE LOS CABLES NO SERAN RESPETADAS LOS LED SERÁN DAÑADOS PERMANENTEMENTE.

СВЕТОДИОДЫ ЧУВСТВИТЕЛЬНЫ К ПОЛЯРНОСТИ ЭЛЕКТРИЧЕСКОГО ТОКА, В СЛУЧАЕ НЕСОБЛЮДЕНИЯ ПОЛЯРНОСТИ СВЕТОДИОДЫ БУДУТ ПОВРЕЖДЕНЫ БЕЗВОЗВРАТНО.

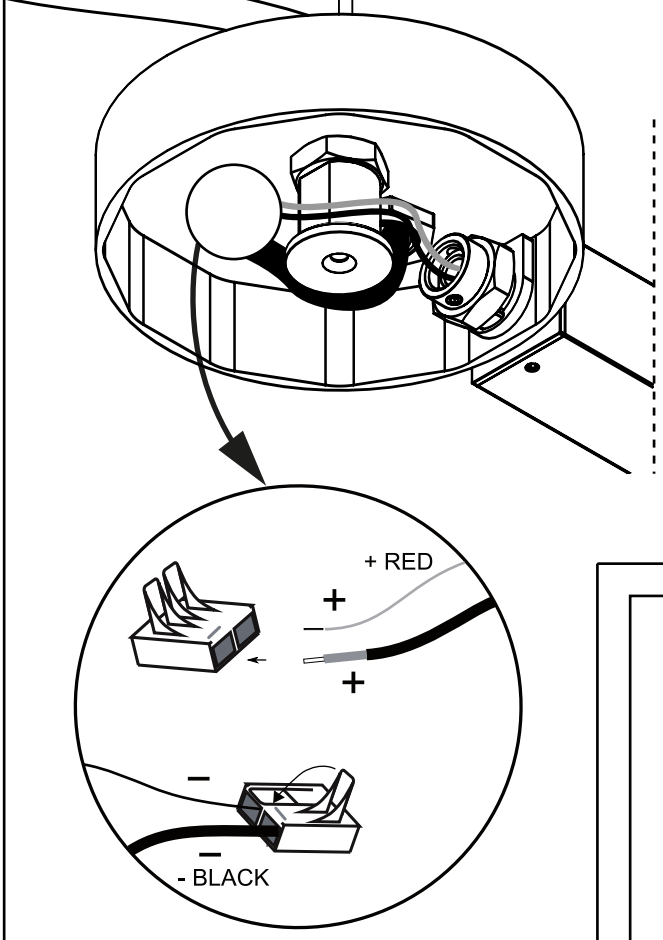

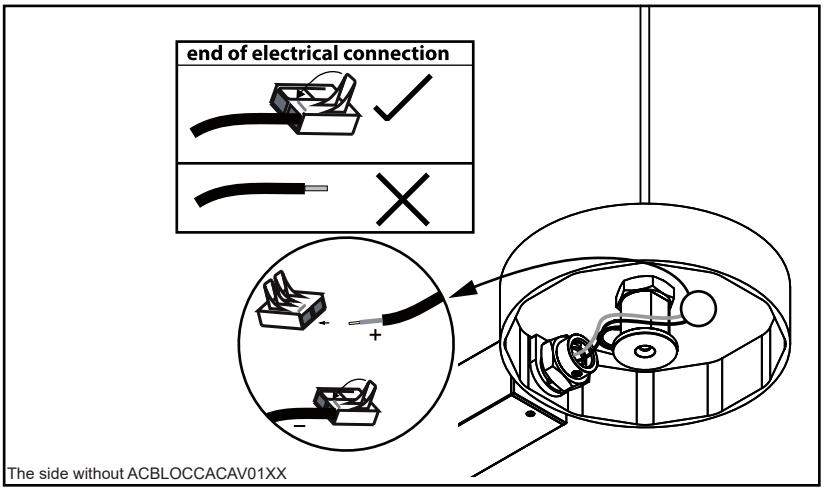

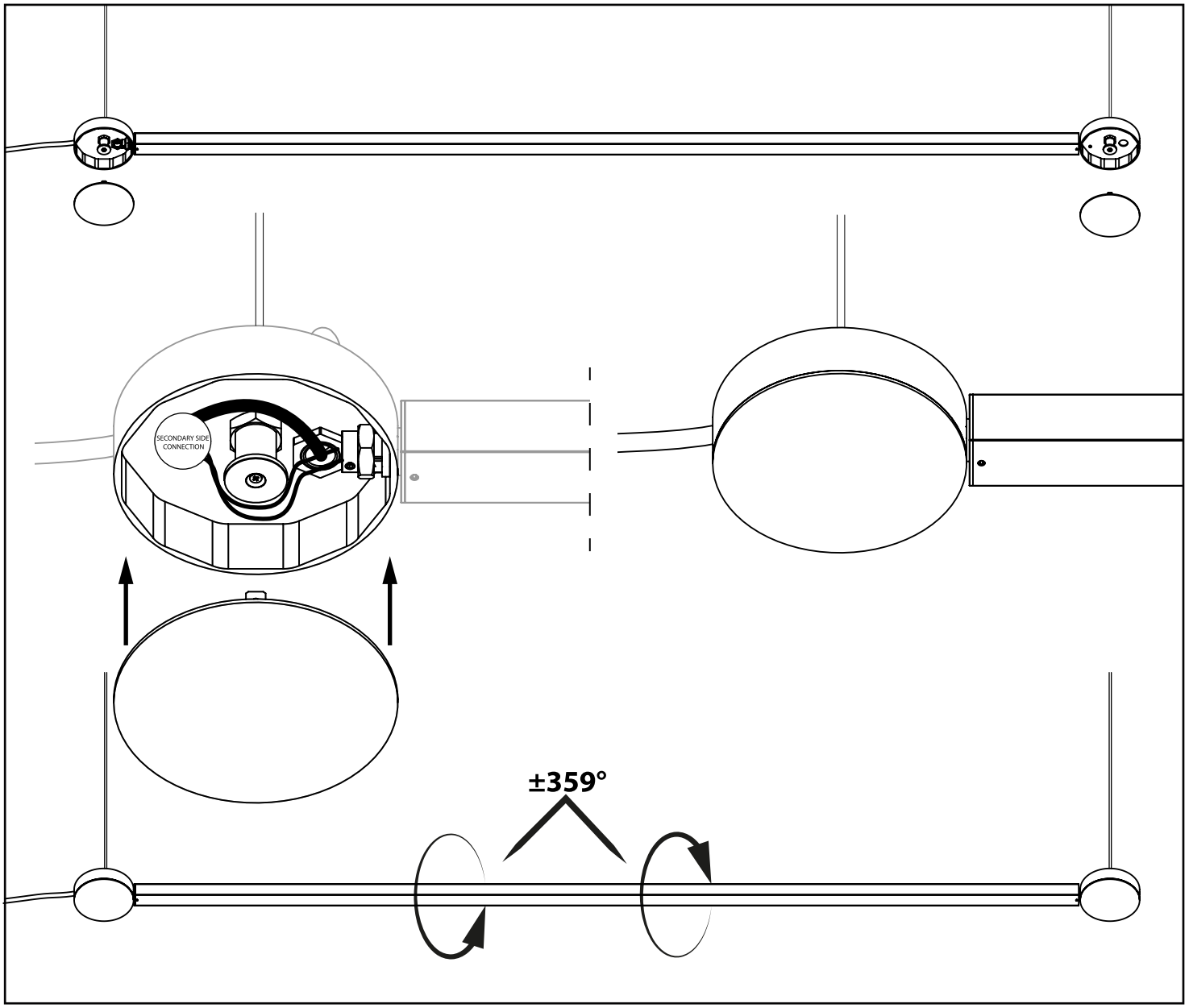
SECONDARY SIDE CONNECTION
±359°

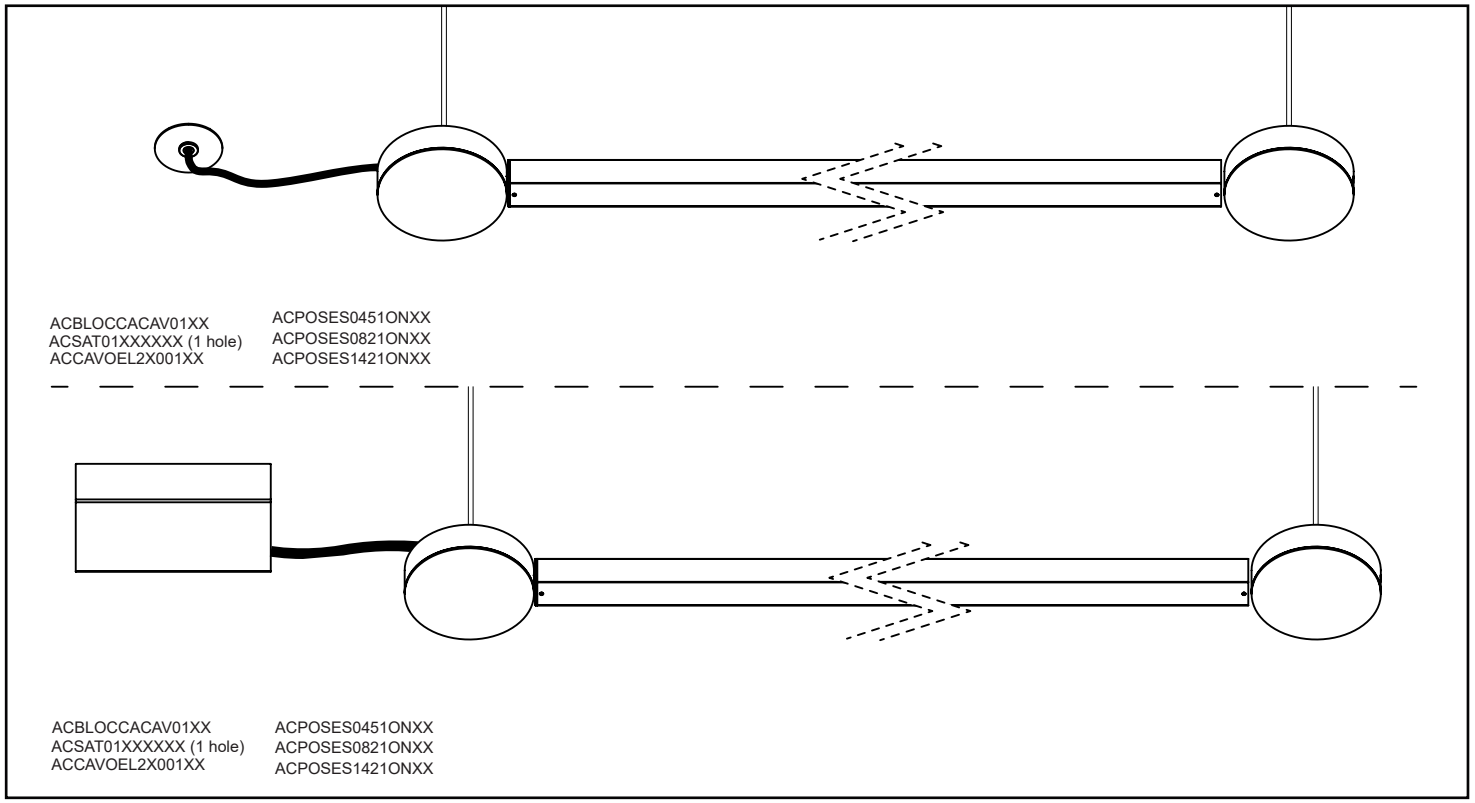
ACBLOCCACAV01XX
ACSAT01XXXXXX (1 hole)
ACCAVOEL2X001XX
ACPOSES0451ONXX
ACPOSES0821ONXX
ACPOSES1421ONXX
ACBLOCCACAV01XX
ACSAT01XXXXXX (1 hole)
ACCAVOEL2X001XX
ACPOSES0451ONXX
ACPOSES0821ONXX
ACPOSES1421ONXX

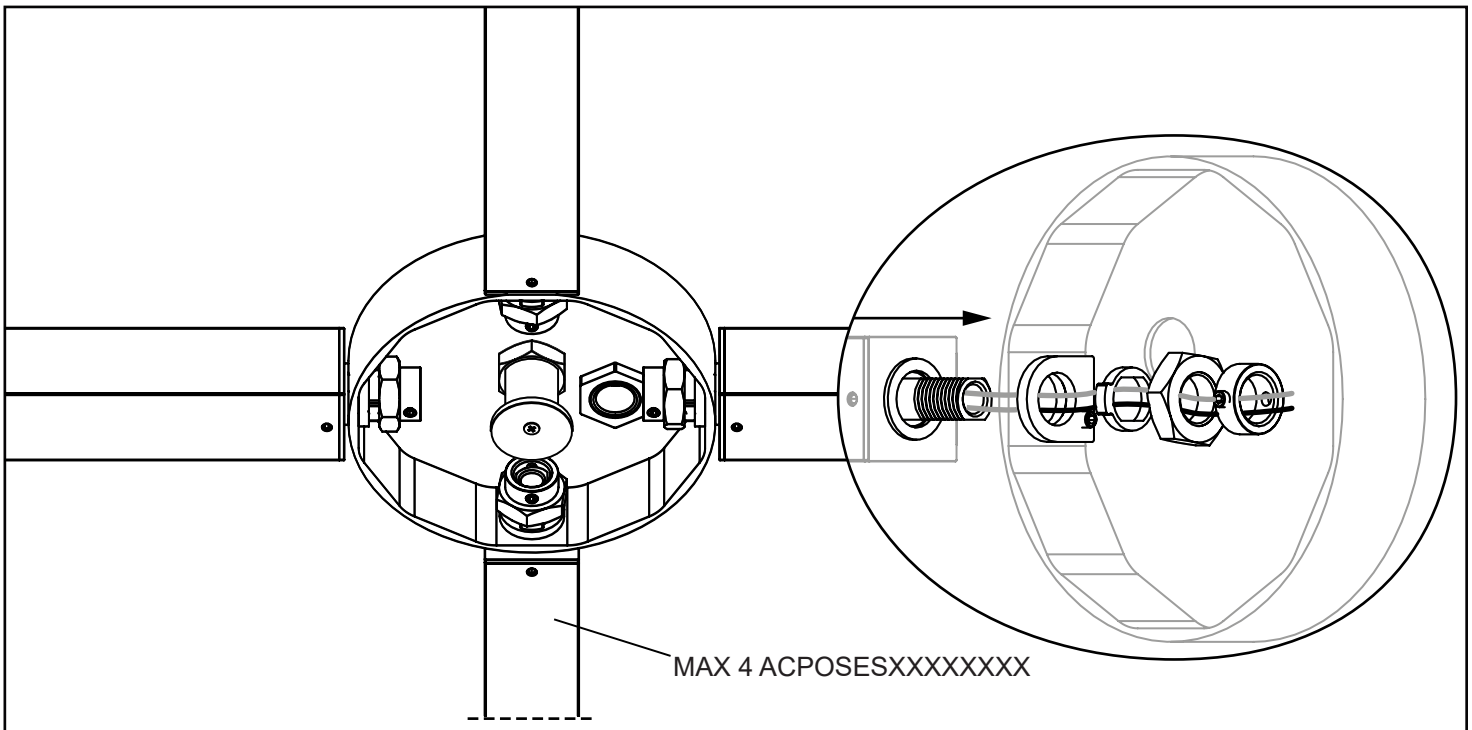

Only for EU market - Not for US/CAN market

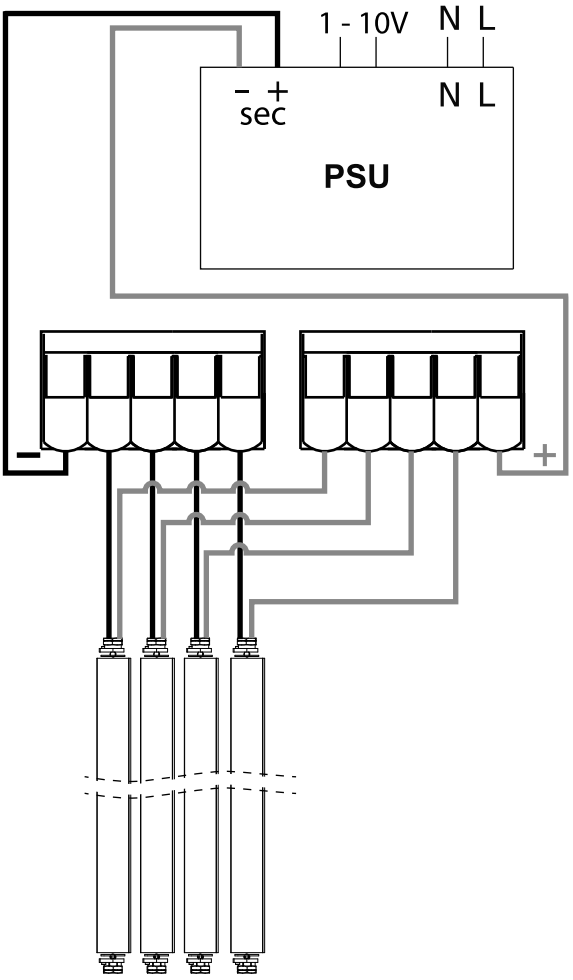

LED DRIVER POWER	CODE	POWER OF THE LIGHT SOURCE	QUANTITY
40W	ACPOSES0451ON	10,2W	3
40W	ACPOSES0821ON	19,4W	1
40W	ACPOSES1421ON	33,5W	1
75W	ACPOSES0451ON	10,2W	6
75W	ACPOSES0821ON	19,4W	3
75W	ACPOSES1421ON	33,5W	2
80W	ACPOSES0451ON	10,2W	7
80W	ACPOSES0821ON	19,4W	3
80W	ACPOSES1421ON	33,5W	2
100W	ACPOSES0451ON	10,2W	9
100W	ACPOSES0821ON	19,4W	4
100W	ACPOSES1421ON	33,5W	2

OPTION OF COMBINATION			
LED DRIVER POWER	CODE	POWER OF THE LIGHT SOURCE	QUANTITY
40	ACPOSES0451ON	10,2W	1
	ACPOSES0821ON	19,4W	1
75	ACPOSES0451ON	10,2W	1
	ACPOSES0821ON	19,4W	1
	ACPOSES1421ON	33,5W	1
80	ACPOSES0451ON	10,2W	2
	ACPOSES0821ON	19,4W	1
	ACPOSES1421ON	33,5W	1
100	ACPOSES0451ON	10,2W	2
	ACPOSES0821ON	19,4W	2
	ACPOSES1421ON	33,5W	1

For US/CAN Market "Use only with Class 2 power unit." - "Utilisez uniquement avec l'unité d'alimentation de classe 2"

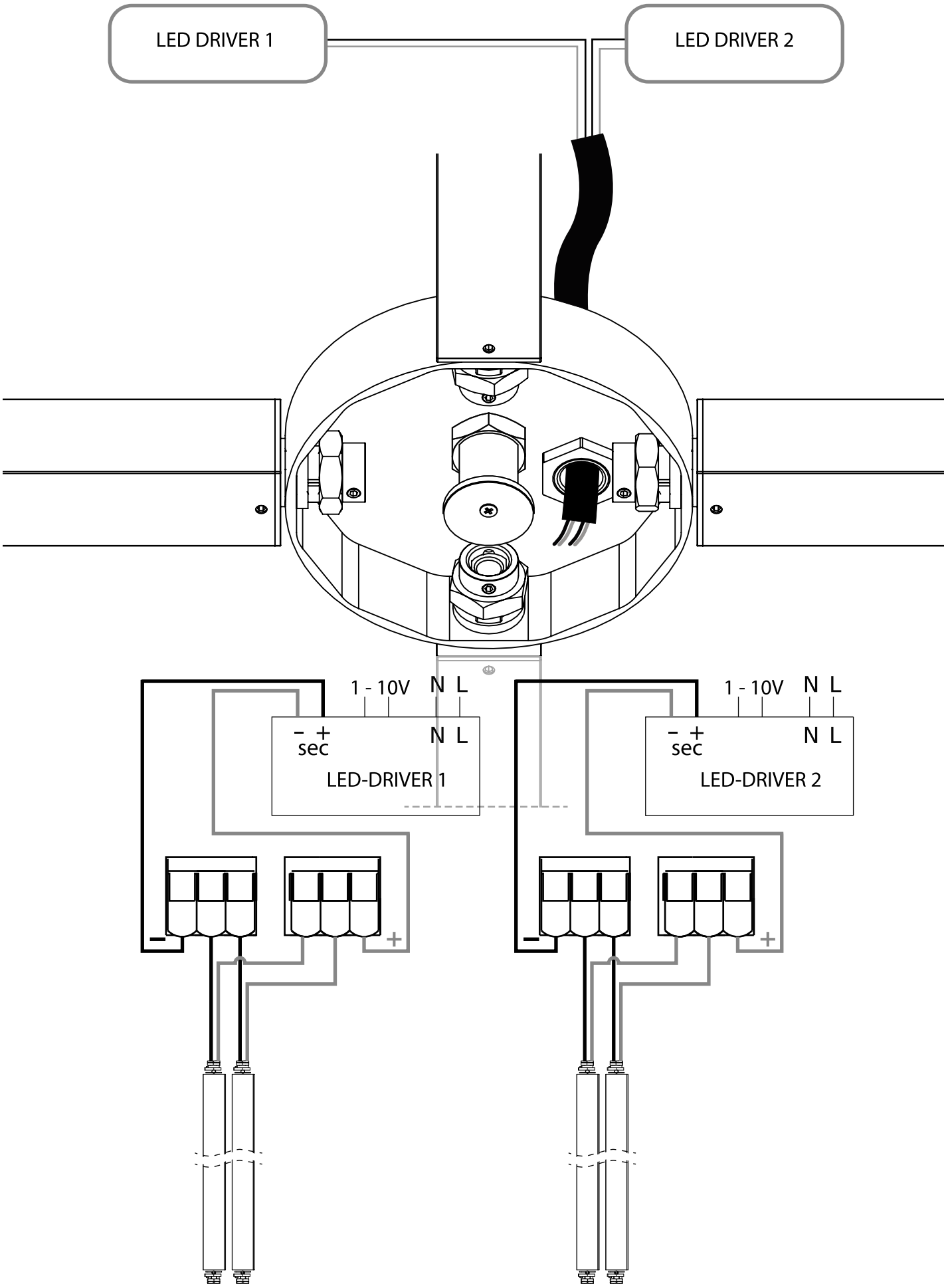

Axolight

I **ATTENZIONE!** Collegare l'alimentatore alla rete elettrica soltanto dopo avere completato l'installazione degli apparecchi.

GB **CAUTION!** Connect Power supply unit to main electricity network only once installation is completed.

F **ATTENTION!** Connectez l'alimentation électrique au réseau électrique principal une fois que l'installation est terminée.

D **ACHTUNG!** Schließen Sie das Netzteil nur dann an das Stromnetz an, wenn die Installation abgeschlossen ist.

E **ATENCION!** Conecte la fuente de alimentación a la red eléctrica principal sólo una vez que se complete la instalación.